OUTBOARD MOTOR

MONTGOMERY WARD

Parts Book

OUTBOARD MOTOR

MODEL NO.
VWB 52179

MW 141



8-78

1979

Engine Cover and Support Plate

ILLUS. NO.	PART NO.	QTY.	DESCRIPTION
1	*S537712	1	Engine cover w/packing, rear retainer and latch bracket
	3C538712	1	Engine cover complete, includes all items marked with an asterisk (*)
2	2026	1	Rivet, support plate cover
3	1475	7	Fill hd screw, 10 - 24 x 1/2
4	A525480	2	Retainer engine cover w/nuts and screws
5	1200	2	Hex hd screw, 1/4 - 20 x 1/2
7	*A518397	1	Decal, engine cover port
	*A518396	1	Decal, engine cover starboard
9	7011	7	Elastic stop nut, 10 - 24
10	525156	1	Cover support plate rear
11	A525038	1	Support plate w/eyelet
12	525615	1	Rod gear shift upper
13	1950	1	Hex hd screw, 10 - 24 x 5/8
14	525912	1	Spring latch shaft
15	1518	2	Nut, 5/16 - 18
16	392777	1	Cam cover latch
17	525840	1	Grommet remote throttle cable
18	525469	1	Handle latch
19	8547	1	Spring pin, 1/8 x 5/8
20	525763	1	Shaft cover latch
21	197767-1	1	Bushing fuel line
22	525390	1	Decal stop
23	525394	1	Decal choke
24	521547	1	Choke knob
25	525925	1	Link choke knob
26	2041	1	Hex hd screw, 10 - 24 x 3/8
27	8567	1	Spring pin, 1/8 x 13/16
28	525614	1	Handle gear shift
29	526524	2	Rivet gear shift handle
30	*K525713	1	Engine cover packing
32	525263	1	Link starter interlock
33	525871	1	Shaft gear shift lever
34	8538	1	Spring pin, 3/32 x 1/2
35	8547	3	Spring pin, 1/8 x 5/8
36	525876	1	Lever gear shift
37	318818	2	Bearing, shift lever shaft
38	1573	4	Fill hd screw, 1/4 - 20 x 1/2
39	525977	1	Lever shift interlock
40	1978	1	Spring pin, 1/8 x 1/2
41	525531	1	Rod shift interlock
42	84035-2	1	Bearing interlock rod
43	84026	1	Screw shoulder
44	1975	1	Lockwasher, #10
45	*A525774	1	Bracket cover latch w/screws and nuts
46	*A518892	1	Decal engine cover front
47	*K516984	1	Blanket top and sides
48	458977-3	1	Lever shift interlock
49	525504	1	Grommet, choke rod
50	307818	3	Bearing (nyliner)
51	85026	1	Screw
52	525025	1	Pad shift detent
53	409740	1	Ball check
54	73741-1	1	Ring
55	178446	1	Clamp lead wire
56	1734	1	Slotted fill hd screw, 1/4 - 20 x 1/2
57	318307	1	Seal, driveshaft

Engine Cover and Support Plate

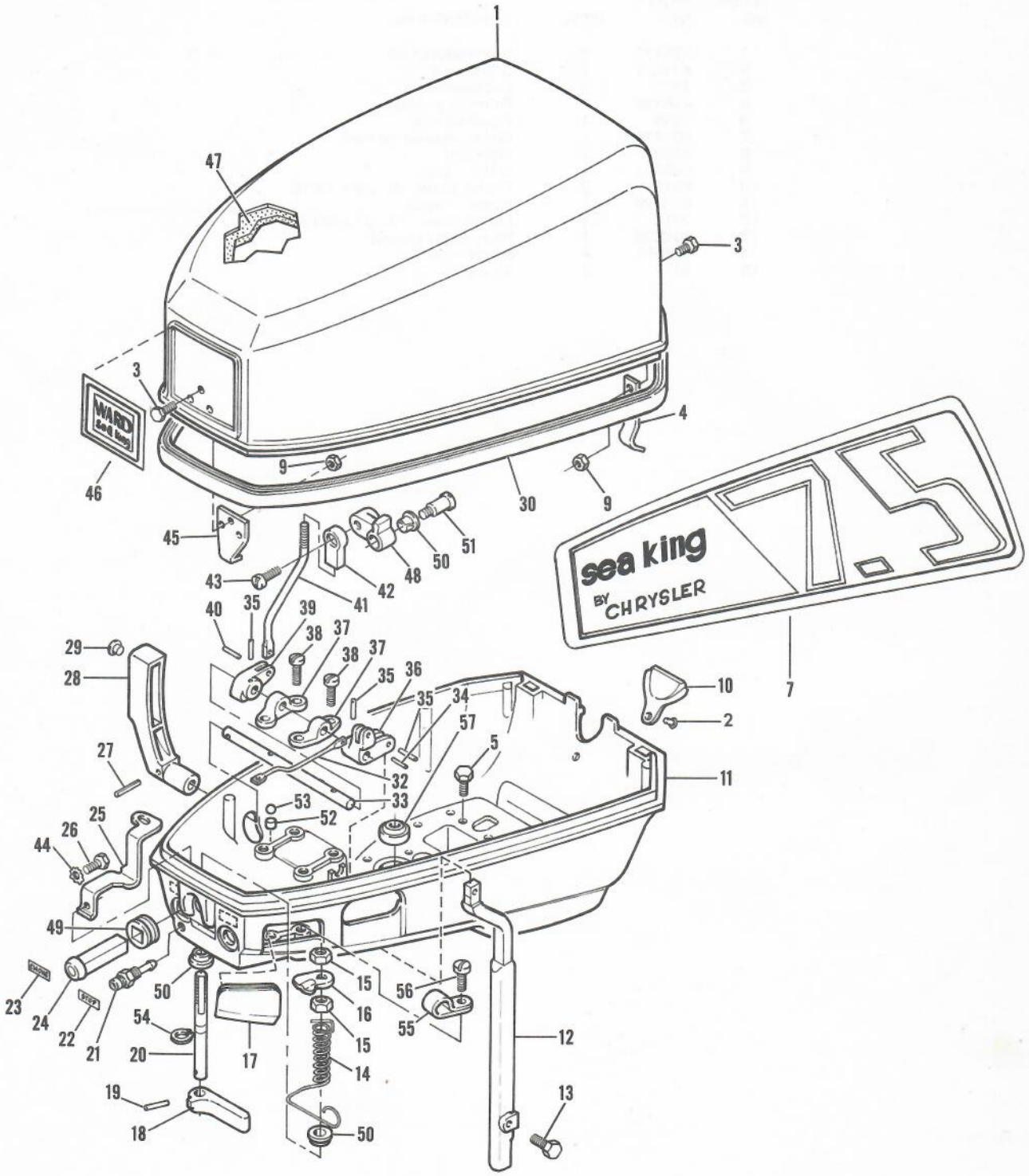

Electrical Components

ILLUS. NO.	PART NO.	QTY.	DESCRIPTION
1	525475	2	C-D Module-Coil
2	K750-2	2	Sparkie kit
3	2106	3	Lockwasher
4	436449	1	Shorting switch
6	1809	1	Flywheel nut
7	901456-1	1	Collar, emergency start
8	525097	1	Flywheel
9	525301	1	Stator - C-D
10	1678	2	Fill hd screw, 10 - 24 x 13/16
11	525029	1	Stator - trigger
12	2010	4	Fill hd screw, 10 - 32 x 9/16
13	404908	1	Wire, stator ground
14	525064	4	Screw - C-D coil
15	1877	2	Ty-rap

Electrical Components

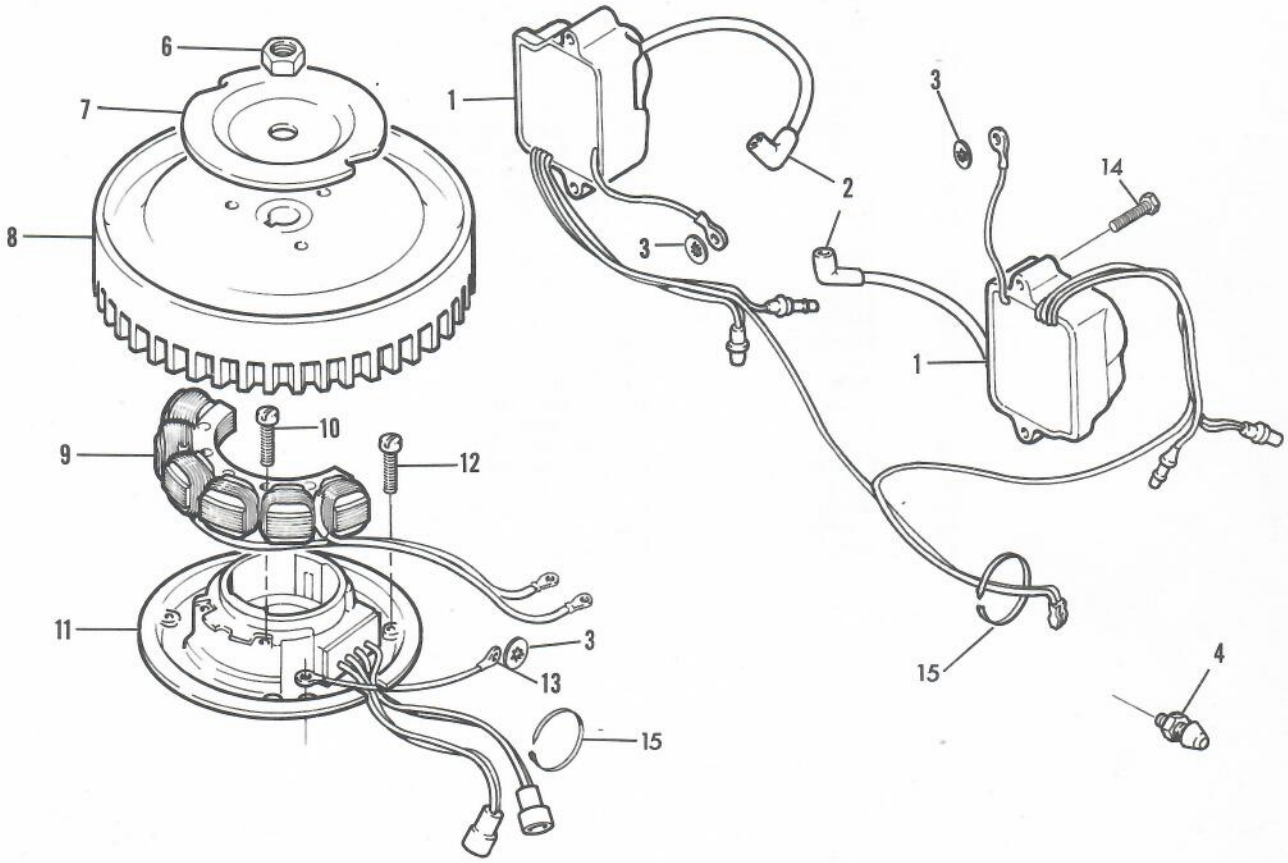

Steering Arm

ILLUS. NO.	PART NO.	QTY.	DESCRIPTION
1	318504	1	Grommet
2	A447137	1	Grip, steering handle with shaft and indicator
3	8548	1	Spring pin, 1/8 x 1
4	286894-3	1	Indicator steering handle
5	53795-1	1	Seal, steering handle dampener
6	525079	1	Handle-steering
7	1974	1	Pan hd screw, 10 - 24 x 5/8
8	1471	1	Hex set screw, 10 - 24 x 1/4
9	525080	2	Screw, steering handle pivot
10	518688	1	Shaft, steering handle
11	525198	1	Throttle stop
12	8547	1	Spring pin, 1/8 x 5/8
13	458519	1	Screw, idle stop
14	525816-1	1	Bearing, steering handle gear
15	525815	1	Gear, steering handle
16	8567	1	Spring pin, 1/8 x 13/16
17	525691	1	Gear, steering arm
18	8540	1	Spring pin, 3/32 x 5/8
19	525582-1	1	Steering arm
20	525877	1	Shaft, magneto control
21	525665	2	Bearing, gear pinion towershaft
22	307818	1	Bearing, steering handle shaft
23	390689	2	Bearing, steering arm pivot screw
24	525605	1	Gear, towershaft
25	525627	1	Gear, towershaft pinion
26	525838	1	Towershaft
27	525689	2	Towershaft bearing
28	1699	2	Hex hd screw, 1/4 - 20 x 1-1/8
29	318347-1	1	Upper mount
30	318539	1	Bumper
31	525524	1	Rivet, steering handle
32	525220	2	Washer, steering handle
33	8043	1	Wave washer
34	84036	1	Bearing, spark control
35	84026	1	Shoulder screw
36	7027	1	Nut (left hand), 10 - 24
37	525445	1	Link, magneto stator control
38	1513	1	Nut, 10 - 32
39	A269141-1	1	Joint, ball assembly
40	525751	2	Screw
41	8060	2	Lockwasher

Steering Arm

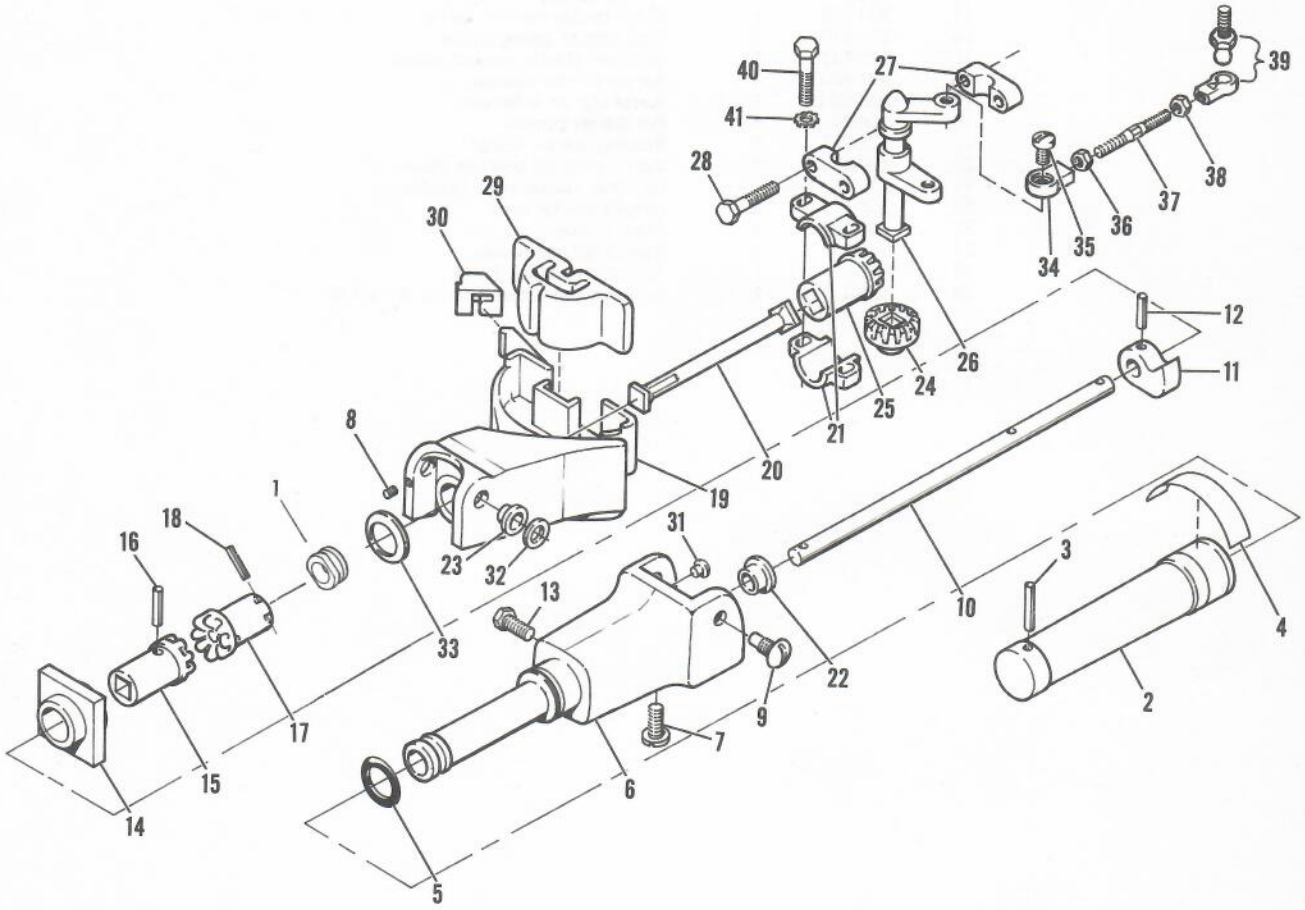

Starter

ILLUS. NO.	PART NO.	QTY.	DESCRIPTION
1	1156	1	Flat hd screw, 1/4 - 20 x 1/2
2	525674	1	Gear starter pinion
3	525424	1	Spring starter pinion
4	1760	1	Pan hd screw, 10 - 24 x 3/8
5	525455	1	Guide starter rope
6	525781	1	Interlock starter
7	2031	1	Hex hd screw, 1/4 - 20 x 3/4
8	525427	1	Bracket starter upper
9	269689	1	Bearing starter bracket upper
10	525105	1	Shaft interlock
11	525629	1	Cotter pin
12	1052	4	Fill hd screw, 1/4 - 20 x 1
13	901739	1	Drive starter rewind spring
14	901710	1	Post starter spring guide
15	525737	1	Retainer starter rewind spring
16	901970	1	Spring starter rewind
17	A525239	1	Spool starter w/screw
18	40425	1	Pin starter pinion
19	525675	1	Bracket starter lower
20	197813	1	Bearing starter bracket lower
21	K286817-1	1	Retainer starter rope handle
22	286132	1	Handle starter rope
23	409232	1	Rope starter
24	8070	1	Bowed spring washer
25	8571	1	Spring pin, 1/8 x 1-3/4
26	1500	1	Rd head sheet metal screw #4 x 1/4

Starter

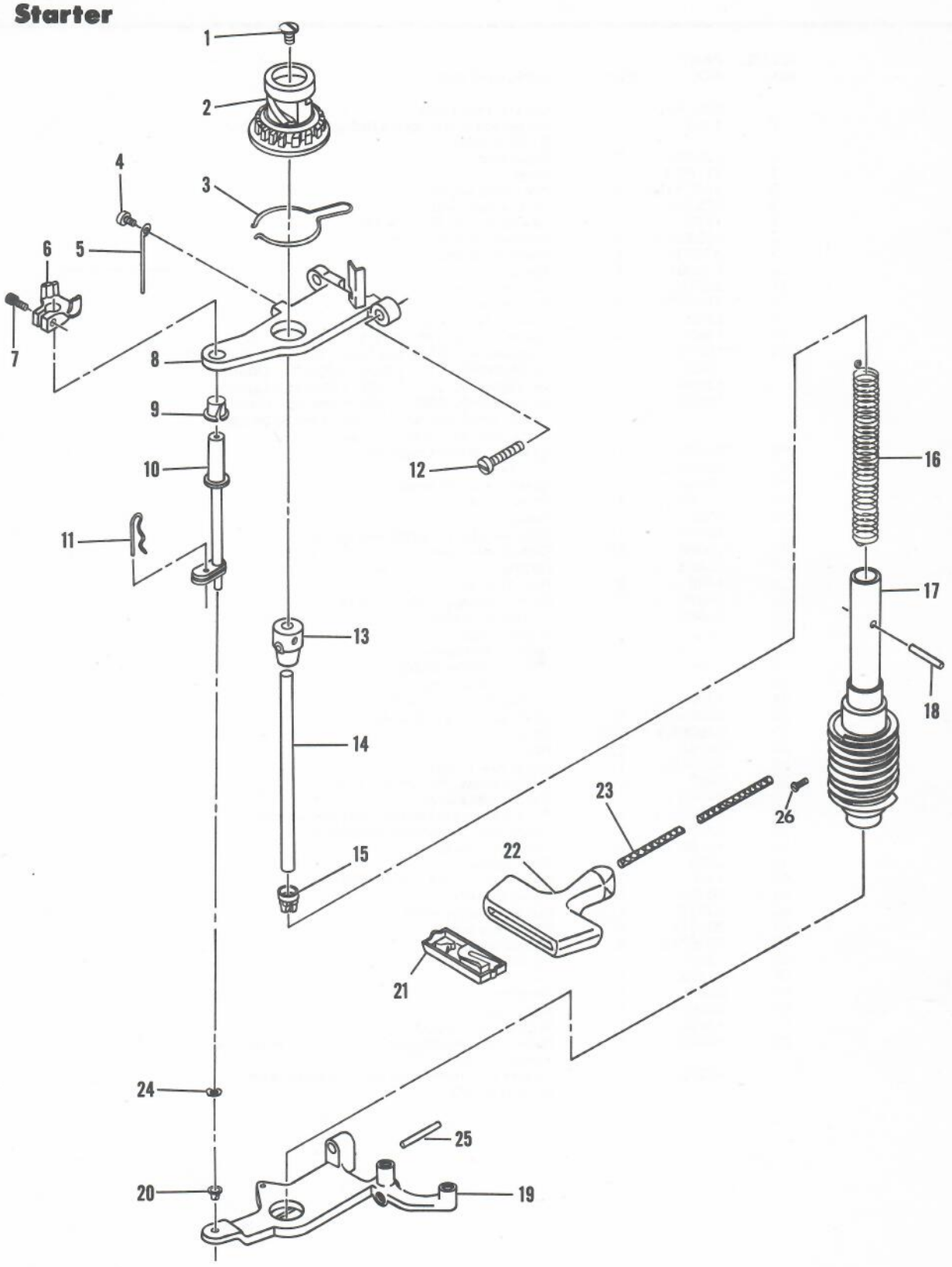

Fuel System

ILLUS. NO.	PART NO.	QTY.	DESCRIPTION
1	525159	1	Gasket, reed plate
2	1755	4	Rd hd screw and spring lockwasher assembly, 6 - 32 x 5/16
3	526161	2	Reed stop
4	31160-1	2	Reed
5	2A525158	1	Plate reed w/seal
6	525168	1	Gasket manifold
7	1772	2	Hex hd screw, 8 - 32 x 1/2
8	525316-1	1	Follower throttle cam
9	A525167	1	Manifold w/studs
10	525081	1	Lever throttle
11	525193	1	Link throttle
12	2788004	2	Stud carburetor
13	*18906	1	Gasket, carburetor
14	1953	4	Hex hd screw, 1/4 - 20 x 1
15	**10089	1	Jet assembly, .041 - Sea level - 3,000 ft. - Standard
	10097		Jet assembly, .040 - 3,000 - 5,000 ft. - Optional
	10096		Jet assembly, .039 - 5,000 - 7,000 ft. - Optional
	10093		Jet assembly, .038 - 7,000 ft. and up - Optional
			Optional size Jet Assemblies are to be used only at altitudes indicated.
16	*10090	1	Gasket fuel bowl retainer
17	10058	1	Fuel bowl
18	*10068	1	Gasket body to bowl
19	**10064	1	Shaft - float
20	10063	1	Float
21	**10101	1	Kit - valve, seat, spring and gasket
22	*10066	1	Gasket valve seat
23	10088	1	Nozzle
24	1490	2	Nut, 1/4 - 20
25	10070	2	Screw assembly - choke valve
26	10062	1	Choke valve assembly
27	**10077	1	Needle - idle
28	10073	1	Spring idle needle
29	10061	1	Choke shaft assembly
30	10072	1	Spring choke stop
31	10085	1	Spring throttle return
32	10081	1	Shaft assembly - throttle
33	526061-2	1	Carburetor
34	84253	1	Hose
35	901746-2	1	Cover fuel pump
36	1069	3	Fill hd screw, 10 - 24 x 1-1/16
37	24748-1	1	Gasket fuel pump
38	A24757-3	1	Plate fuel pump reed w/reeds and screws
39	2A24747-1	1	Diaphragm, fuel pump w/gaskets
40	18160-2	2	Reed fuel pump
41	8003	2	Plain washer
42	1286	2	Pan hd screw, #4 - 40 x 3/16
43	10091	1	Valve throttle
44	10071	1	Screw, throttle valve
45	901811	1	Filter fuel pump
46	2706772	4	Clamp hose
47	2042	1	Washer
48	84253	1	Hose
49	90807	1	Retaining ring
50	525984	1	Seal, reed plate
51	10084	1	Spring, float support
52	10083	1	Repair kit, includes all items marked with a double asterisk (**)
	**10069	1	Gasket kit, includes all items marked with an asterisk (*)

Fuel System

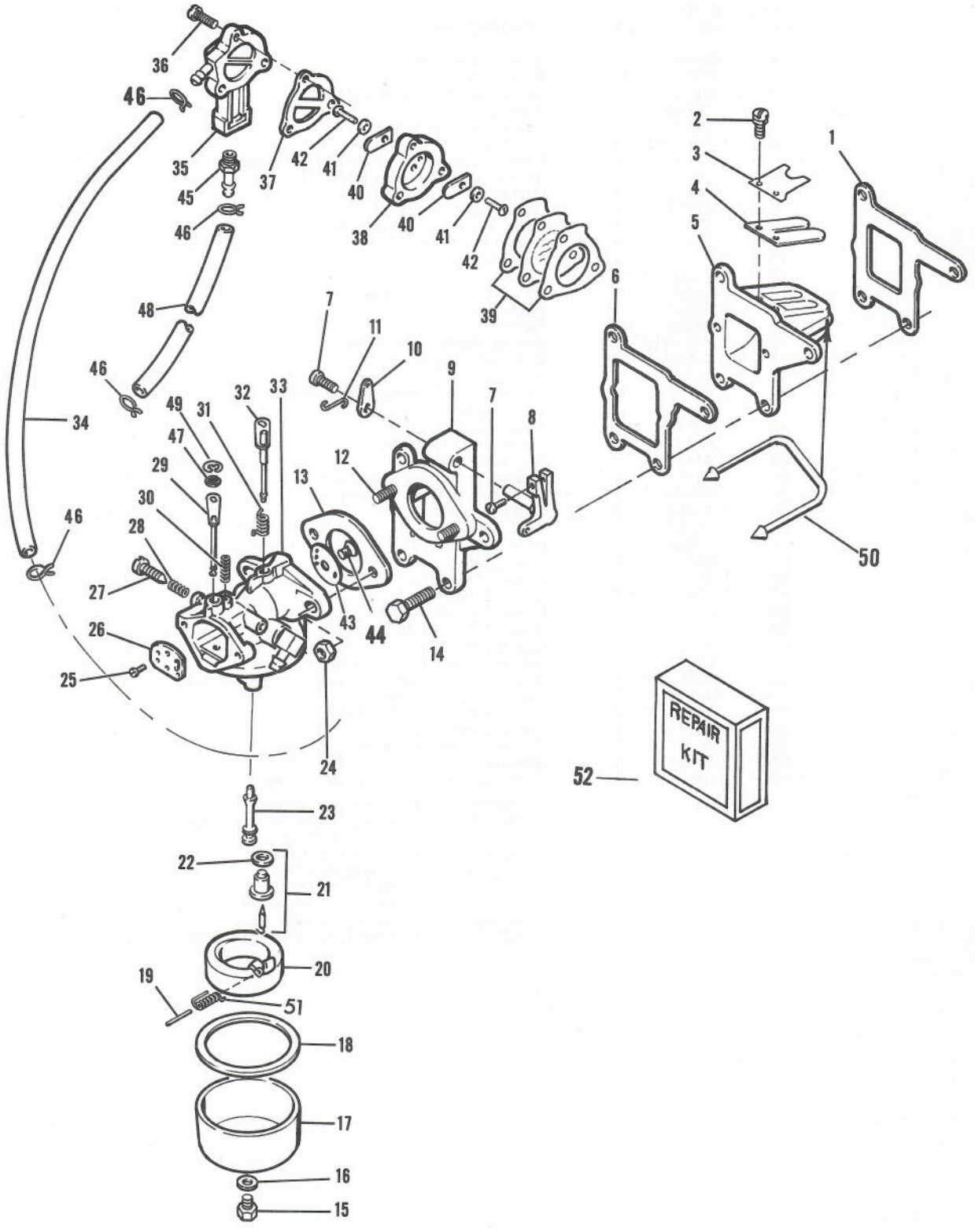

Power Head

ILLUS. NO.	PART NO.	QTY.	DESCRIPTION
1	901938-1	10	Screw, cylinder head
2	8025	10	Plain washer
3	S521227-1	2	Spark plug, Champion (L-86)
4	525518	1	Cylinder head
5	525529	1	Gasket, cylinder head
6	*2A525010	1	Cylinder
	C525010	1	Cylinder complete (not shown), includes all items marked with an asterisk (*)
7	525472	1	Gasket, cylinder drain cover
8	429811	2	Screen, cylinder drain
9	A525471	1	Cover, cylinder drain w/screen
10	1110	4	Screw, 1/4 - 20 x 5/8
11	8559	2	Dowel Pin
12	*1A26260-1	2	Piston ring
13	*250410	4	Piston pin retaining ring
14	*250017	2	Piston pin
15	*525015	2	Piston
16	*2A521016	2	Connecting rod w/item 22
17	*A525241	2	Crankpin roller cage
18	*A525228	2	Roller crankpin
19	*286571	1	Roller assembly, center main bearing
20	*A286155	1	Liner, center main
21	*525579	1	Crankcase seal
22	*36634	4	Connecting rod screw
23	*141118	1	Seal, crankshaft lower
24	*343014	1	Bearing, crankshaft lower main
25	*2A525018	1	Crankshaft w/upper bearing
26	525154	2	Gasket, exhaust
27	525151	1	Plate exhaust
28	525152	1	Cover exhaust
29	1953	8	Screw, 1/4 - 20 x 1
30	*1257	2	Screw, 5/16 - 18 x 1-1/4
31	*1994	2	Screw, 5/16 - 18 x 1
32	*1044	2	Screw, 1/4 - 20 x 1-3/8
33	*1107	6	Screw, 1/4 - 20 x 3/4
34	525082	1	Ring stator
35	286277	1	Gasket, crankshaft bearing cage
36	A286144-1	1	Cage, crankshaft bearing w/upper crankshaft seal
37	346146	1	Seal, crankshaft upper
38	1111	4	Fill hd screw, 1/4 - 20 x 7/8
39	*468342	1	Seal, crankshaft spline
40	525279	1	Gasket, cylinder mounting
41	458498	1	Magneto key
42	G1018	1	Gasket set, includes items listed below:

18906	1	Gasket, carburetor
286277	1	Gasket, crankshaft brg. cage
525154	2	Gasket, exhaust
525159	1	Gasket, reed plate
525168	1	Gasket, manifold
525279	1	Gasket, cyl. mounting
525453	1	Gasket, leg mounting
525529	1	Gasket, cylinder head
525472	1	Gasket, cylinder drain cover

Power Head

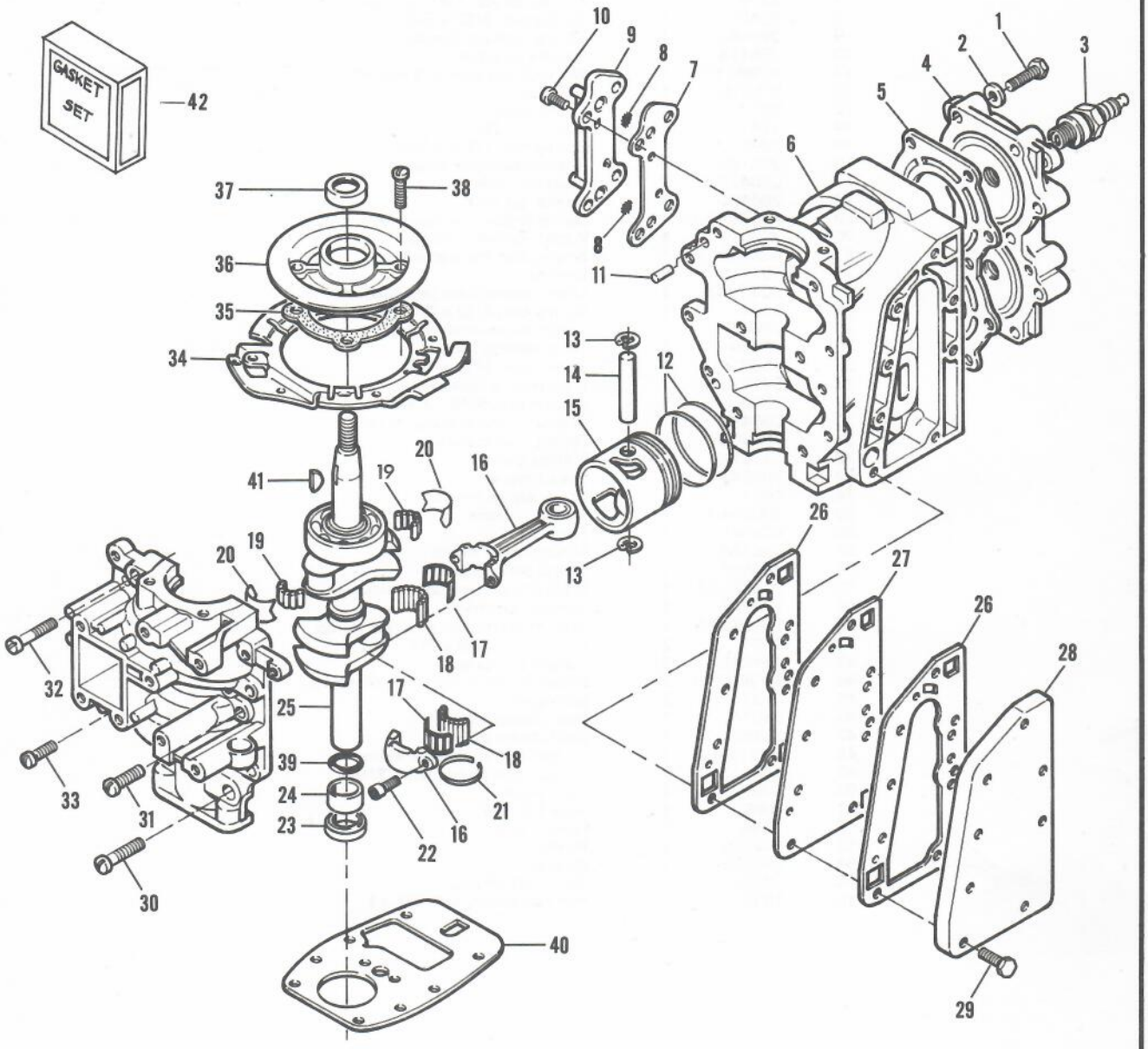
GASKET SET
42
37
38
36
35
34
41
19
20
16
10
9
8
7
1
2
3
4
5
6
11
13
14
12
15
26
27
28
29
32
33
31
30
25
39
24
23
22
21
17
18
40

Motor Leg

ILLUS. NO.	PART NO.	QTY.	DESCRIPTION
1	318342	1	Seal, waterline inlet upper
2	525244	1	Waterline
3	525453	1	Gasket, leg mounting
4	525779	1	Baffle idle relief
5	525133	1	Motor leg
6	525707	2	Cover, shock mount lower
7	1972	2	Hex hd screw, 1/4 - 20 x 2-1/2
8	8540	1	Spring pin, 3/32 x 5/8
9	286461	1	Spring lock bar handle
10	286114	1	Handle lock bar
11	A286113	1	Bar lock w/items 8, 9 and 10
12	525019	1	Kingpin
13	8083	2	Lockwasher
14	1341	2	Nut, 1/4 - 20
15	1805	1	Spring pin, 1/4 x 1-3/8
16	286169	2	Bearing swivel bracket
17	286422-1	2	Pivot tilt lock
18	286451	2	Spacer tilt lock
19	K525072-1	1	Swivel bracket w/items 16 and 32
20	286011	1	Washer swivel bracket
21	525839	1	Screw, steering friction
22	197813	2	Bearing
23	A387742	1	Lever reverse lock intermediate
24	1794	2	Spring pin, 3/32 x 3/8
25	286827	1	Lever reverse lock release
26	286364	1	Lever reverse lock
27	8538	2	Spring pin, 3/32 x 1/2
28	341510	1	Link reverse lock lever
29	1806	1	Groove pin, 5/16 - 3-3/4
30	286433	1	Bracket shallow water drive
31	286300	1	Spring reverse lock
32	213274	2	Fitting grease
33	286349	1	Lock reverse
34	1467	1	Screw swivel bracket
35	286544-1	1	Spring tilt lock
36	429541	1	Lock tilt
37	525346	2	Mount lower shock
38	286037	1	Bolt stern bracket
39	S286032-1	1	Bracket stern starboard w/screw clamp
40	286647	1	Handle carrying
41	S286532-2	1	Bracket stern port w/screw clamp
42	8554	2	Spring pin, 3/16 x 3/4
43	424075	2	Handle clamp screw
44	A298073-1	2	Screw clamp w/items 45, 46 and 47
45	8537	2	Spring pin
46	24074	2	Foot clamp screw
47	66480	2	Stud clamp screw
48	A197395-3	1	Identification plate w/screws
49	1447	2	Rd hd drive screw, #2 x 3/16
50	8039	1	Plain washer
51	7005	1	Nut, 3/8 - 16
52	1666	1	Wave washer
53	525286	1	Washer
54	286286-1	1	Washer
55	286585-1	1	Decal, tilt release
56	1833	8	Hex cap screw, 1/4 - 20 x 1

Motor Leg

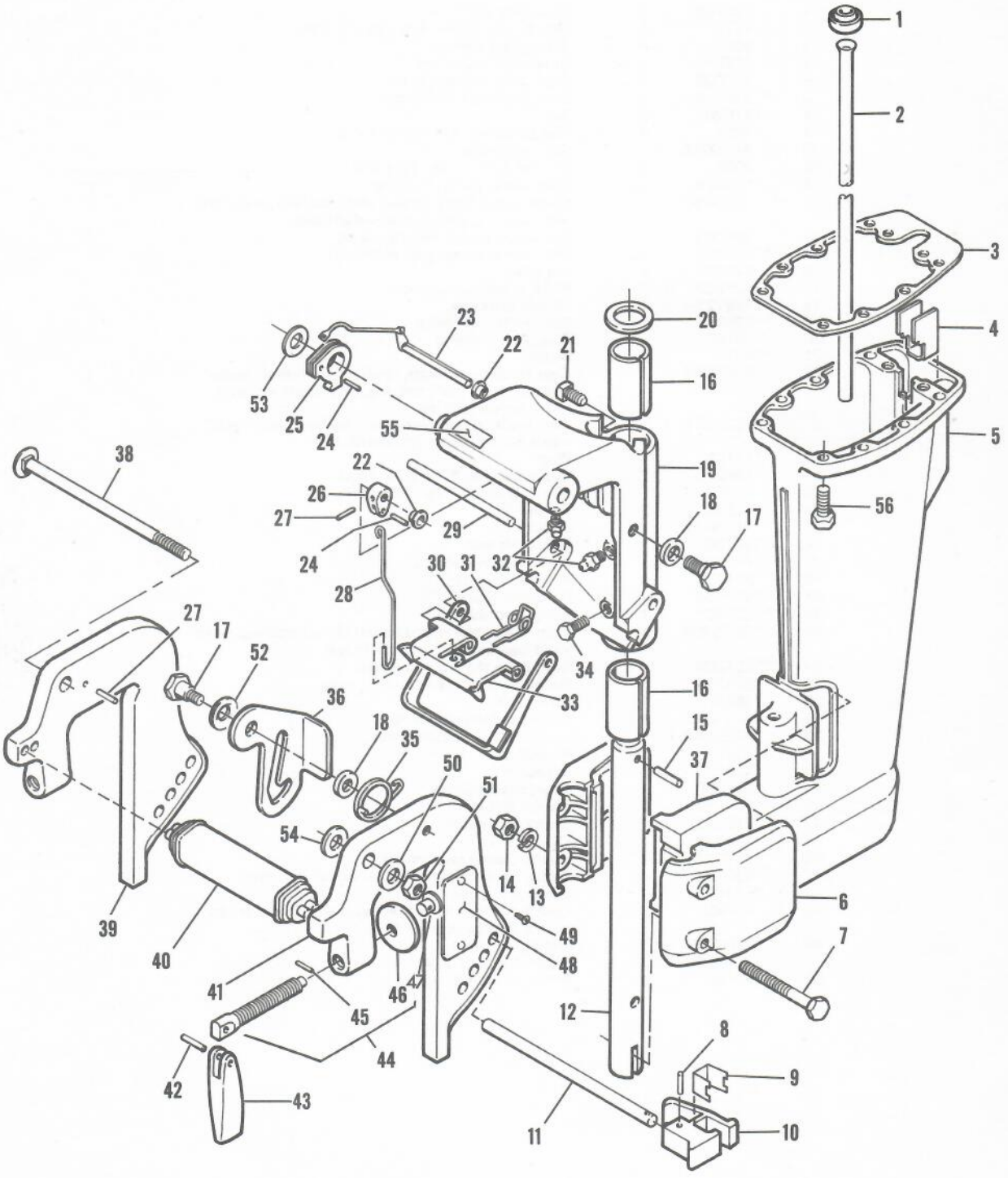
1
2
3
4
5
6
7
8
9
10
11
12
13
14
15
16
17
18
19
20
21
22
23
24
25
26
27
28
29
30
31
32
33
34
35
36
37
38
39
40
41
42
43
44
45
46
48
49
50
51
52
53
54
55
56

Gear Housing

ILLUS. NO.	PART NO.	QTY.	DESCRIPTION
1	525705	1	Rod, gear shift
2	1175	1	Hex hd cap screw, 1/4 - 20 x 1-7/8
3	8083	8	Spring lockwasher
4	525845	1	Extension motor leg
5	521006	1	Stud, gear housing front
6	**338618-1	1	Seal, gear shift rod lower
7	**318307	2	Seal
8	1891	2	Hex hd screw, 1/4 - 20 x 1-1/2
9	A510914	1	Seal, waterline
10	2008	1	Hex hd screw, 1/4 - 20 x 7/8
11	525388	1	Disc, water pump locating
12	A525060	1	Water pump body w/gear shift rod seal, waterline seal, locating disc and driveshaft seal
14	390563	1	Pin, water pump impeller drive
15	**474342	1	Seal, water pump gear shift rod
16	525065	1	Impeller
17	525562	1	Plate, water pump back
18	*459721-1	1	Clutch shift cam
19	**525555	1	Seal, shift rod cavity
20	*50109	2	Plug, gear housing
21	**8077	2	Washer
22	*A525054	1	Gear housing w/plugs, washers, driveshaft upper bearing, prop shaft bearing, driveshaft seal and bevel pinion bearing
	C525054	1	Gear housing complete (not shown), inlcudes all items marked with an asterisk (*)
23	*19109	1	Plug
24	1990	2	Hex hd screw, 1/4 - 20 x 1-5/8
25	1705	2	Hex cap screw, 1/4 - 20 x 3/4
26	*525457	5	Screw
27	A525116	1	Snout
28	**521307	1	Propshaft seal
29	*A521023	1	Bevel gear w/bearing
30	*901728	1	Pin clutch shift
31	*525098	1	Propeller shaft
32	**525305	1	Seal, prop shaft
33	*A525298	1	Prop shaft cage w/prop shaft thrust bearing, prop shaft bearing and prop shaft seal
34	**521305	1	Seal, prop shaft bearing cage
35	*521296	1	Retainer, prop shaft bearing cage
36	1846	1	Cotter pin
37	A324101	1	Propeller pin w/item 36
38	A286094-1	1	Propeller nut w/cotter pin
39	P343	1	Propeller
40	525128	1	Driveshaft
41	*521266	1	Gear, bevel pinion
42	*409719	1	Clutch spring
43	*318372	1	Clutch pin guide
44	*409521	1	Clutch shift
45	*317717	1	Washer, bevel gear thrust
46	430732	4	Motor leg extension to gear housing screws
47	*521023	1	Bevel gear - rear
48	K1062	1	Gear housing seal kit, includes all items marked with a double asterisk (**)
49	A518392	1	Decal, leg - port
	A518391	1	Decal, leg - starboard
50	K1067	1	Water pump kit

Gear Housing

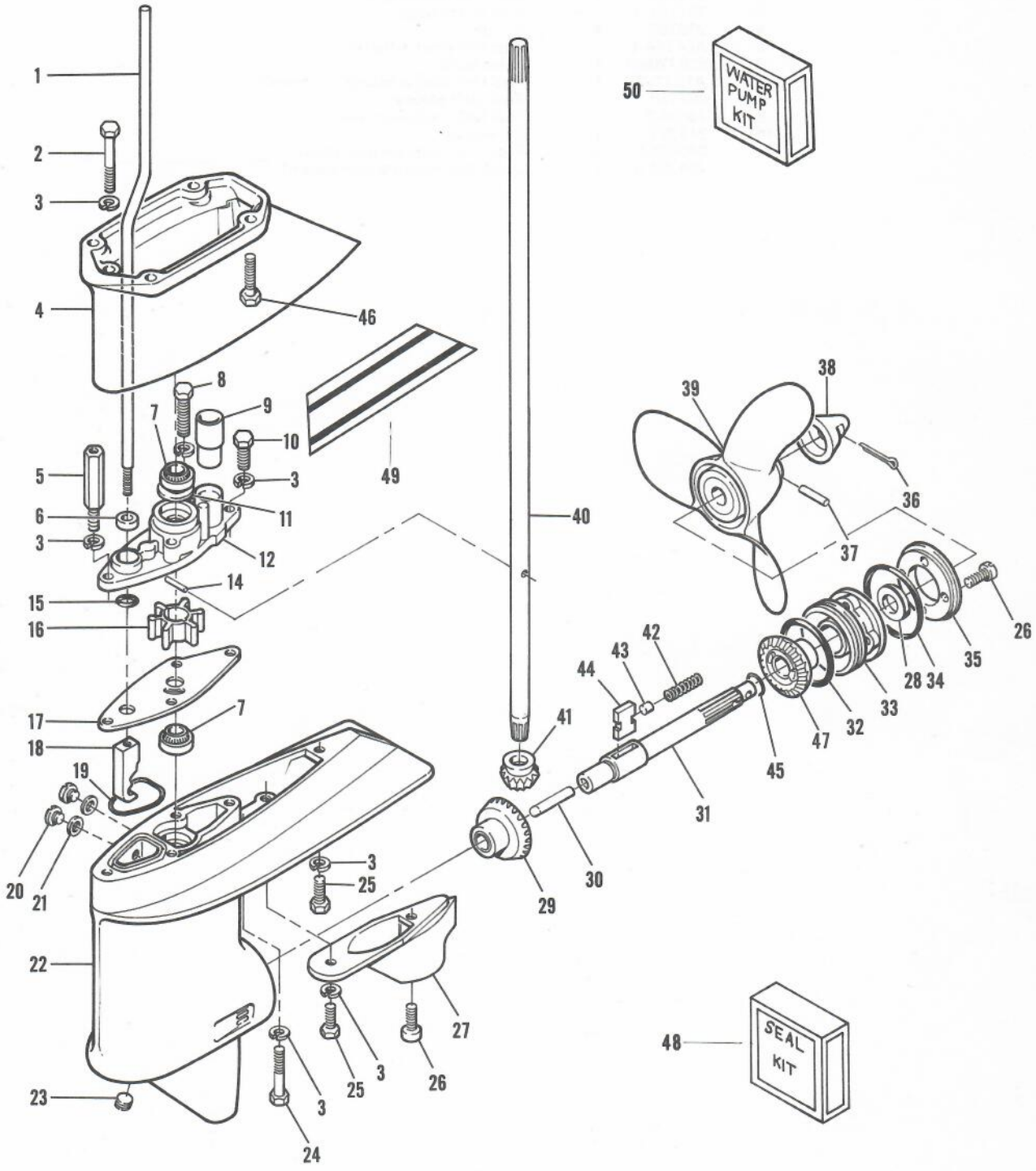

Fuel Tank and Line

ILLUS. NO.	PART NO.	QTY.	DESCRIPTION
1	213342	1	Seal, fuel line coupler
2	213735	1	Seal, fuel line coupler
3	197787-3	1	Fuel line coupler
4	298788	4	Ferrule
5	A84754-1	1	Fuel line short w/ferrules
6	S387766-1	1	Prime bulb
7	A197752-1	1	Fuel line, long w/clamp and ferrule
8	487755	1	Fuel tank adapter
9	76034-2	1	Fuel tank (accessory item)
10	213251	1	Gauge cap
	S409752	1	Fuel line complete (not shown)
	224394-3	1	Decal, fuel mixture (not shown)

Fuel Tank and Line

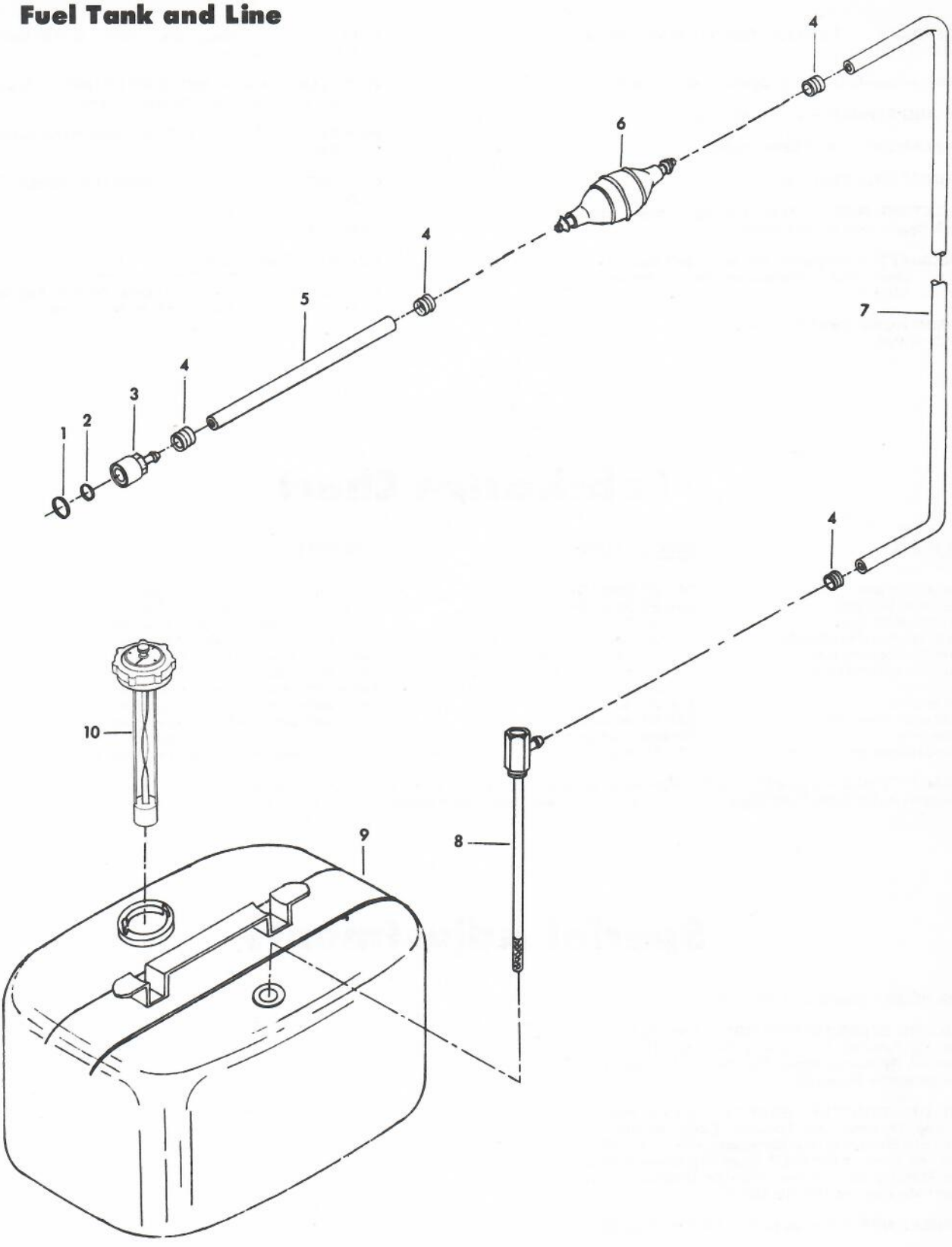

Specifications

HORSEPOWER – 7.5 B.I.A. Certified Brake H.P. at 4750 R.P.M.

ENGINE – Two-Cycle, Twin Cylinder, Alternate Firing.

BORE AND STROKE – 2" x 1-19/32".

DISPLACEMENT – 10.0 Cubic Inches.

CARBURETOR – Float Feed.

CONNECTING ROD – Steel Forging - Steel Cages With Needle Bearings at Crankshaft.

CRANKSHAFT – Forged Nickel Steel. Ball Bearings at Upper Main. Full Complement Needle Rollers at Center Main.

RECOMMENDED OPERATING RANGE – 4250 - 5250 R.P.M.

FUEL TANK – Separate Steel Tank - 6 U.S. Gallons, 5 Imperial Gallons.

PROPELLER SHAFT AND DRIVESHAFT – Stainless Steel, Hardened, Ground and Polished.

PROPELLER – 8" Dia. x 9" Pitch, Right Hand Rotation, 3 Blade.

COOLING – Water Cooled - Positive Displacement Type Water Pump.

TRANSOM HEIGHT – 15"

WEIGHT – 53 Pounds

TILT LOCK – Positive Tilt Lock Permits Engine to Remain in Tilted Position When Not in Use.

Lubrication Chart

PART NAME	TYPE OF LUBRICANT	HOW OFTEN
Starter pinion gear	SAE 30 Motor Oil	If starter operation becomes sluggish
Starter spool bearings	SAE 30 Motor Oil	If starter operation becomes sluggish
Throttle cam follower	SAE 30 Motor Oil	Twice each season, oftener if required
Magneto control shaft bearings	SAE 30 Motor Oil	Twice each season, oftener if required
Steering handle pinion gear	EP-All Purpose Chassis Lubricant	Twice each season, oftener if required
Steering handle bevel gear	EP-All Purpose Chassis Lubricant	Twice each season, oftener if required
Reverse lock	SAE 30 Motor Oil	Twice each season, oftener if required
Clamp screws	SAE 30 Motor Oil	Twice each season, oftener if required
Stern bracket pivot bolt	SAE 30 Motor Oil	Twice each season, oftener if required
Gear housing	Chrysler Outboard Gear Lube	Every 30 hours, oftener if required
Fuel line coupler release ring	SAE 30 Motor Oil	Twice each season, oftener if required

GREASE FITTINGS – Grease Fittings Are Provided at Critical Points Where Bearing Surfaces Are Not Exposed Externally. Using an Automotive Type Grease Gun and Lubricant, Grease Twice Each Season or Oftener if Required.

Special Adjustments

SPARK PLUG – Champion L-86, Gap .030".

ADJUSTING STEERING FRICTION – Steering Friction Can Be Adjusted by Turning the One (1) Steering Friction Adjusting Screw, Illustration 21 Page 15 in the Direction Required.

POINT OF THROTTLE OPENING – Set the Position of the Throttle Cam Follower Roller so that the Throttle Shutter in the Carburetor will be CLOSED and All Slack REMOVED from the Linkage when the Throttle Cam Follower is on the Throttle Pick Up Point Mark on the Throttle Cam Plate.

FLYWHEEL NUT – Torque to 40 - 50 Foot Pounds.

GENUINE WARDS PARTS

how to obtain replacement parts

Replacement Parts may be obtained from your Wards Retail Store, Service Center, Catalog Store or Catalog House and will be made available at current prices. If requested, prices will be quoted in advance when not listed.

When requesting replacement parts, be sure to give the model and serial number which is shown on the model plate. Also give the part number and the name of the part as shown in the parts list.

If you order by mail, you will pay the transportation charges from the shipping point.

SERVICE NATIONWIDE

MONTGOMERY WARD

The merchandise you have purchased from us has been carefully engineered and manufactured under Wards rigid quality standards and should give you satisfactory and dependable operation. However, like all mechanical merchandise, it may occasionally require adjustment or maintenance. Should you ever need technical assistance, please contact or write your nearest Wards Retail Store, Service Center, Catalog Store or Catalog House.

provide the following:

1. Model, serial number and all of the other data shown on the model plate.
2. The date and the Wards branch from which you purchased your merchandise.
3. State briefly the trouble you are having.

Printed in U.S.A.